Penetrating Particle Analyzer: PAN

G. Ambrosi

INFN Perugia, Italy

Genesis of the project

- **Informal discussions among colleagues working on Galactic Cosmic Rays (AMS-02, DAMPE)**
- **Interest in the Space Weather activities**
- **positive feedback at the presentation at the ESA DSG (LOP-G) Workshop, Dec. 5-6, 2017**
- **positive feedback at the presentation at the NASA DSG (LOP-G) Workshop, Feb 27-Mar. 1, 2018**

ELSEVIER

Check for updates

Available online at www.sciencedirect.com

ScienceDirect

Advances in Space Research 63 (2019) 2672–2682

ADVANCES IN SPACE RESEARCH (a COSPAR publication)

www.elsevier.com/locate/asr

Penetrating particle ANalyzer (PAN)

X. Wu [a,*], G. Ambrosi [b], P. Azzarello [a], B. Bergmann [c], B. Bertucci [b,d], F. Cadoux [a], M. Campbell [e], M. Duranti [b], M. Ionica [b], M. Kole [a], S. Krucker [f,g], G. Maehlum [h], D. Meier [h], M. Paniccia [a], L. Pinsky [i], C. Plainaki [j], S. Pospisil [c], T. Stein [h], P.A. Thonet [e], N. Tomassetti [b,d], A. Tykhonov [a]

[a] *Department of Nuclear and Particle Physics, University of Geneva, CH-1211 Geneva, Switzerland*
[b] *Istituto Nazionale di Fisica Nucleare, Sezione di Perugia, I-06123 Perugia, Italy*
[c] *Institute of Experimental and Applied Physics, Czech Technical University in Prague, 12800 Prague, Czech Republic*
[d] *Dipartimento di Fisica e Geologia, Università degli Studi di Perugia, I-06123 Perugia, Italy*
[e] *European Organization for Nuclear Research (CERN), CH-1211 Geneva, Switzerland*
[f] *School of Engineering, University of Applied Sciences and Arts Northwestern Switzerland, CH-5210 Windisch, Switzerland*
[g] *Space Sciences Laboratory, University of California at Berkeley, CA 94720, USA*
[h] *Integrated Detector Electronics AS (IDEAS), NO-0484 Oslo, Norway*
[i] *Physics Department, University of Houston, Houston, TX 77204, USA*
[j] *Agenzia Spaziale Italiana, I-00133 Roma, Italy*

Introduction to PAN

- **PAN is a scientific instrument for deep space and interplanetary missions**
  - Precisely measure and monitor in real time the flux, composition, and direction of **penetrating particles (> ~100 MeV/nucleon) in deep space**.
- **Science goals: multi-disciplinary and cross-cutting**
  - *Cosmic ray physics*: fill an in situ observation gap of **galactic cosmic rays** (GCRs) in the GeV region in deep space, crucial for the understanding of the origin of the GCRs, and their interplay with solar activities.
  - ***Solar physics***: provide precise information on **solar energetic particles** for studying the physical process of **solar events**, in particular those producing intensive flux of energetic particles.
  - Space weather: gather data to develop **space weather models** from the energetic particle perspective.
  - *Planetary science*: measure and monitor energetic particles to develop a full picture of the **radiation environment of a planet**, in particular as a **potential habitat.**
  - *Deep space travel*: PAN can **monitor the flux and composition of penetrating particles during a space voyage**. PAN can become a standard on-board instrument for deep space travel.

Radiation environment in deep space

- Plasma environment
  - Mainly low energy protons and electrons from solar wind
    - Unperturbed solar wind plasma (<10 keV)
  - Effectively stopped by multilayer insulation (MLI) sheets (up to 100 keV)
- Particle radiation sources
  - Particles trapped in the Geomagnetic field
    - Negligible in deep space
  - Transient flux: Solar Energetic Particle (SEP)
    - Particles from solar eruptions (flare and Corona Mass Ejection)
    - Dominant at low energy (< 100 MeV)
      - "GeV" Solar Particle Events rare but potentially damaging/dangerous
  - Steady flux: Galactic Cosmic Rays (GCR)
    - Dominant at high energy (> 100 MeV), peak at ~1 GeV/n
    - Modulated by solar activities
    - Important contribution to TID for long missions (shield?)

~GeV particle flux have not been precisely measured in situ in deep space

Electrons measurements : energy and time

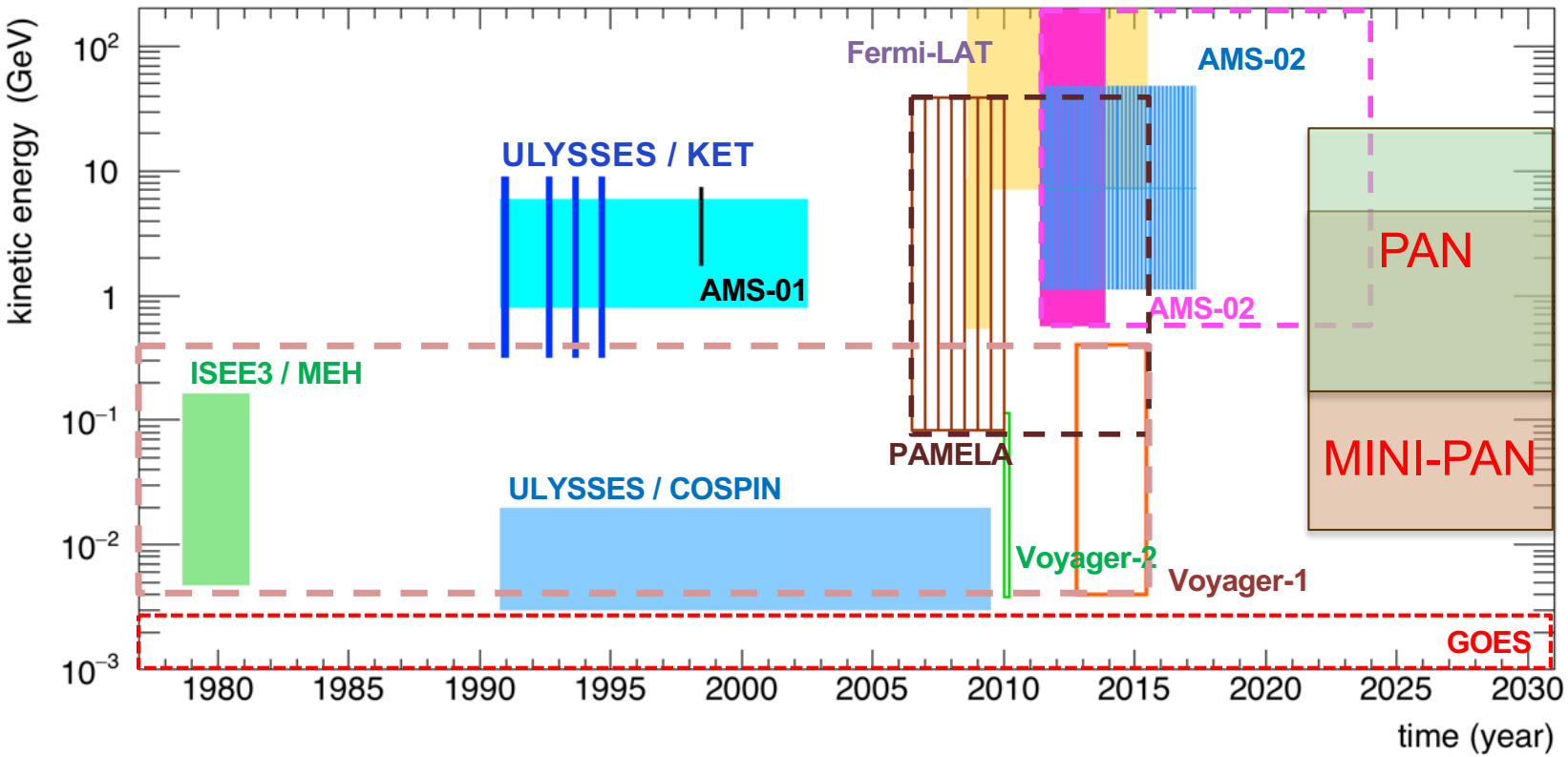

Deep space mission: low energies, E –dE/dx technique, cherenkov , no $e^{+/-}$ separation

LEO CR mission: higher energies, spectrometers e^+/e^- separation

PAN/MINI-PAN : covering a gap in energy/time

Proton measurements : energy and time

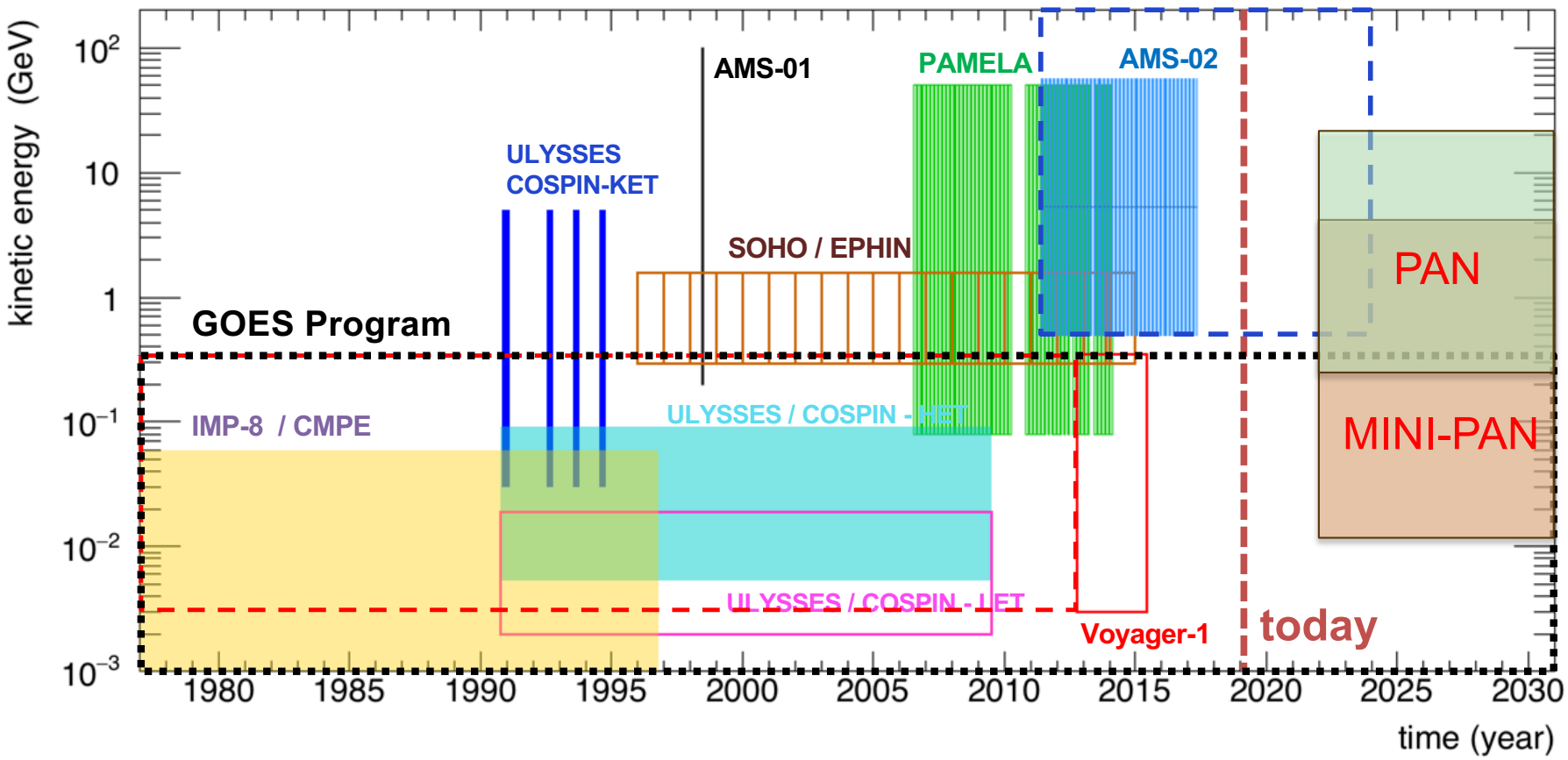

<u>Deep space mission</u>: low energies, E –dE/dx technique, particle rates

<u>LEO CR mission</u>: higher energies, calibrated fluxes

PAN/MINI-PAN : covering a gap in energy/time

Example of existing measurements

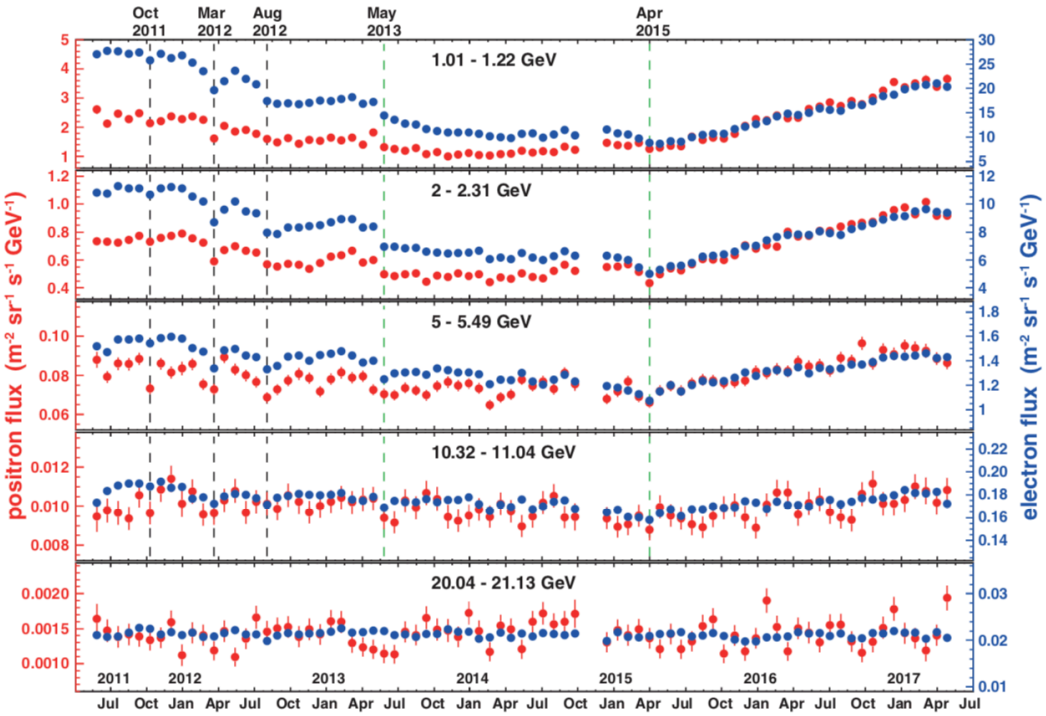

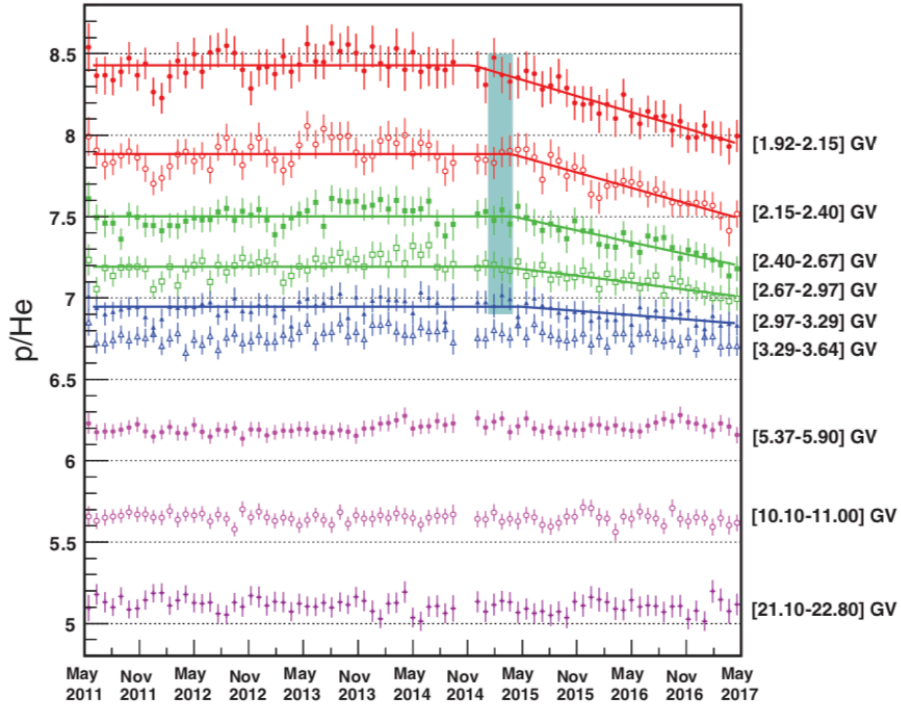

AMS-02 data on time structure in the cosmic rays fluxes

Electrons measurements : the energy spectrum

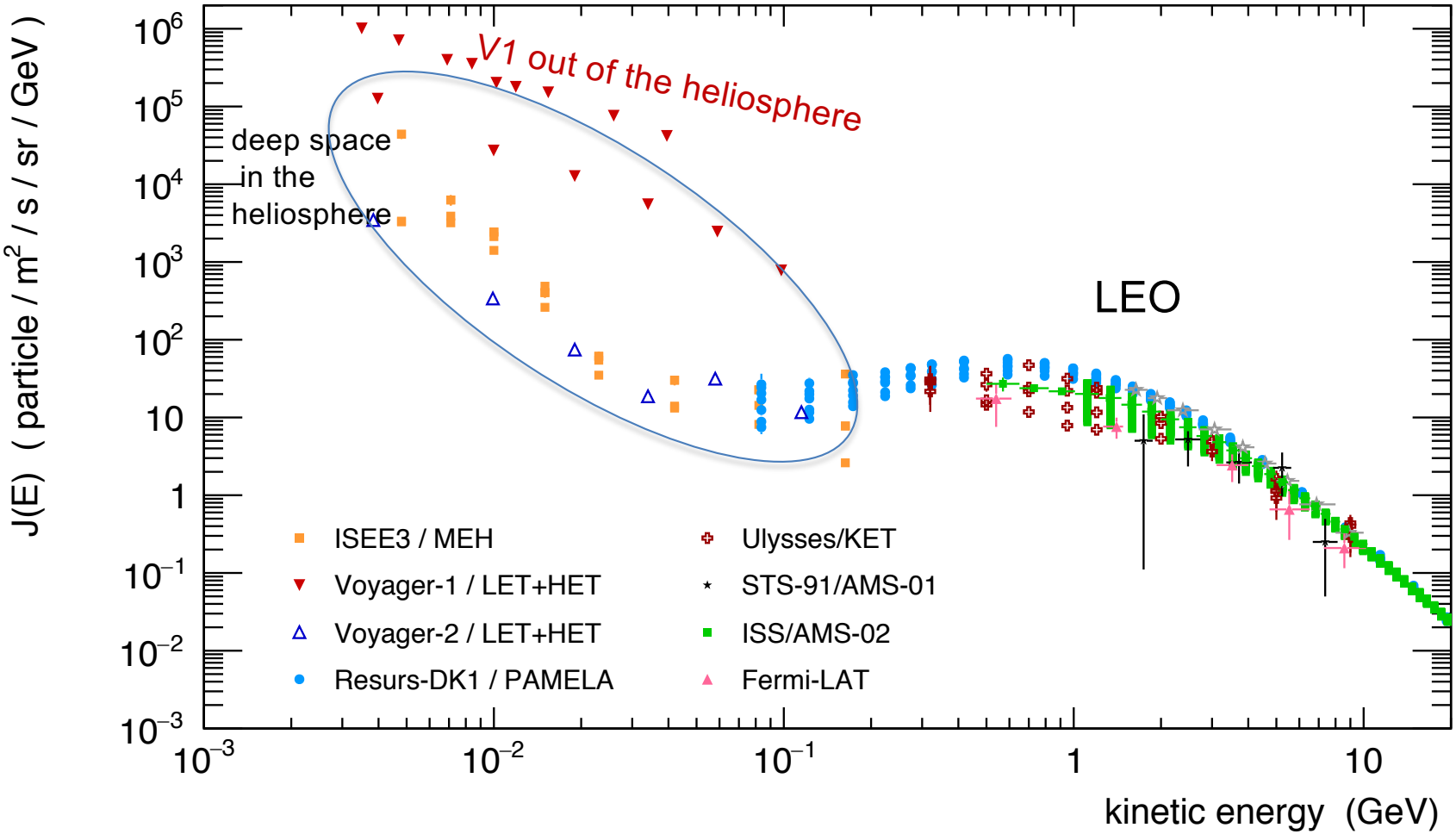

Proton measurements : the energy spectrum

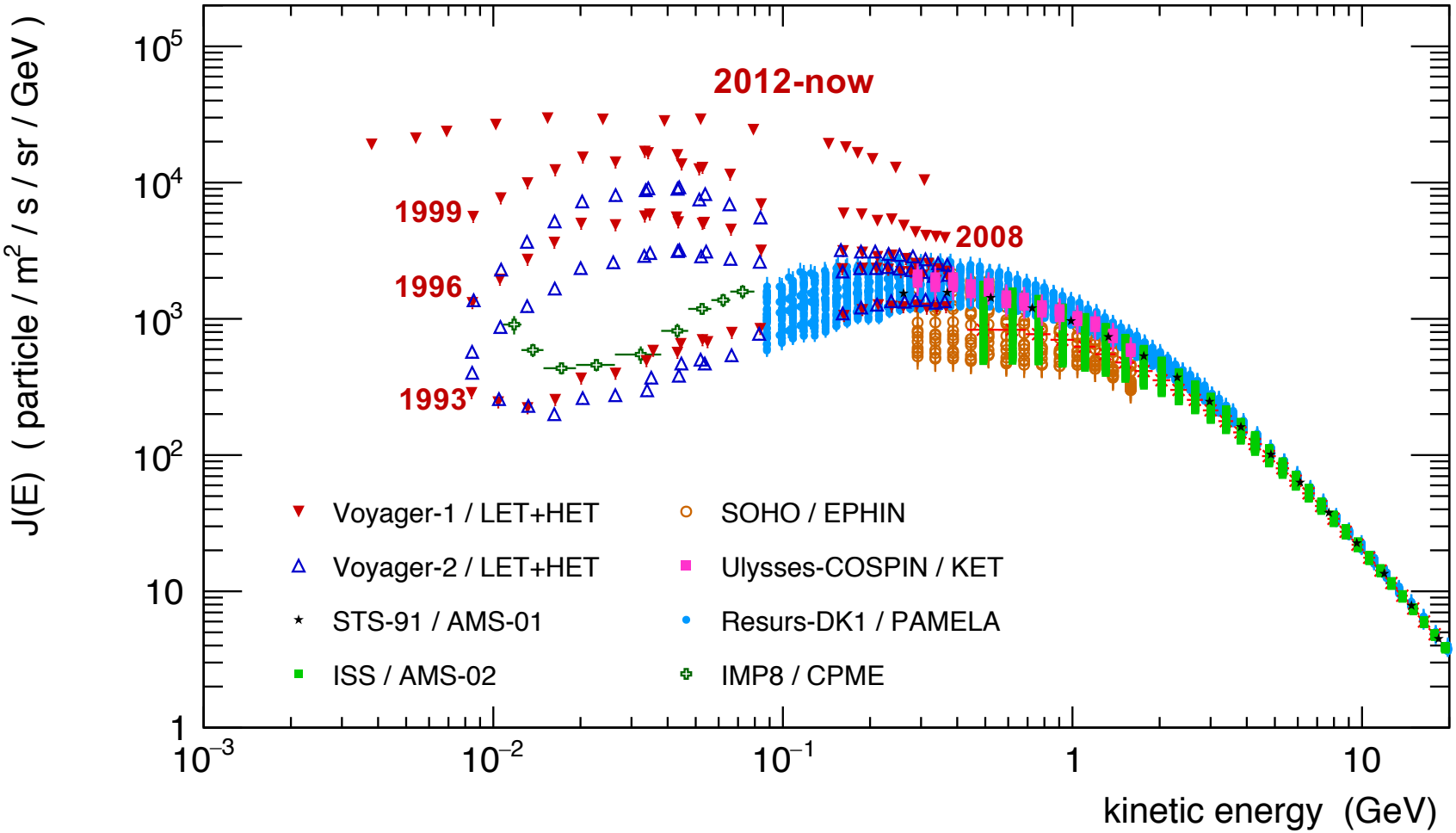

PAN Instrument proposal (LOP-G or satellite)

- **Light weight (20 kg) low power (20 W) spectrometer with permanent magnet**

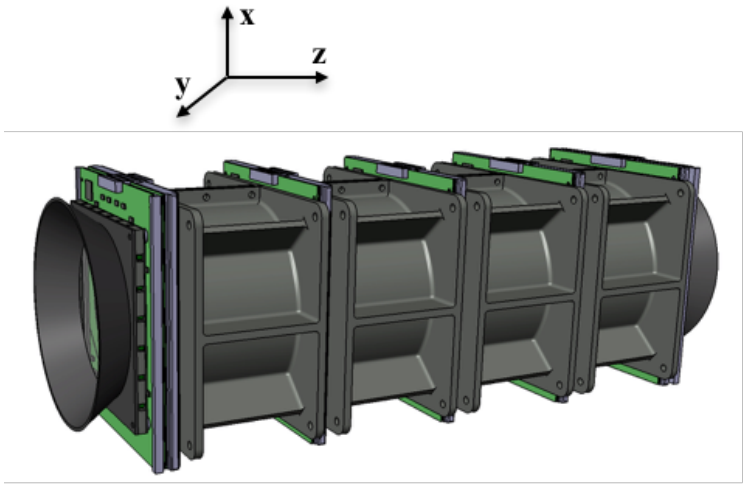

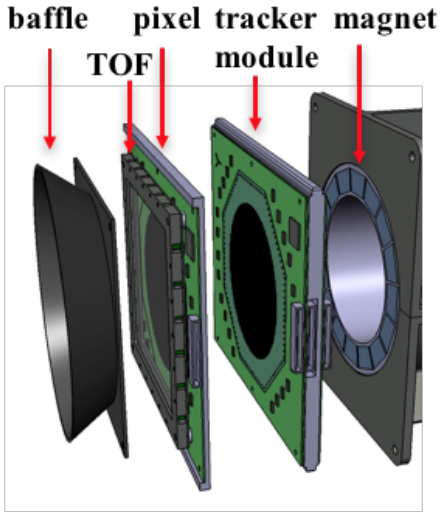

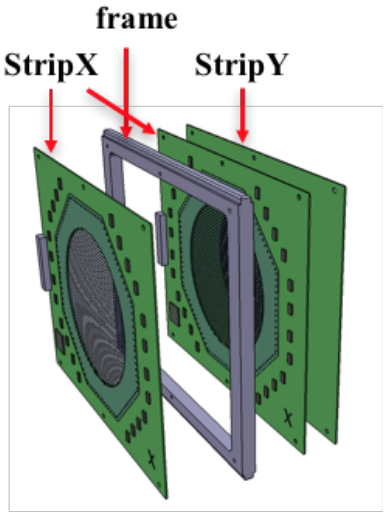

- **4 Halbach permanent magnet sectors, ϕ = 10 cm, L = 10 cm each, provide a dipole magnetic field of ~0.2 Tesla, total weight ~11 kg**

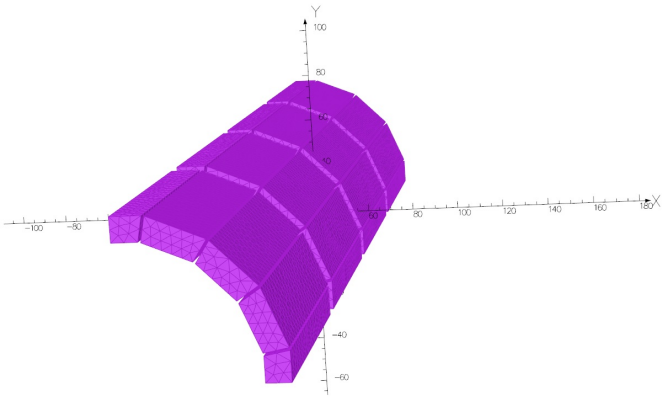

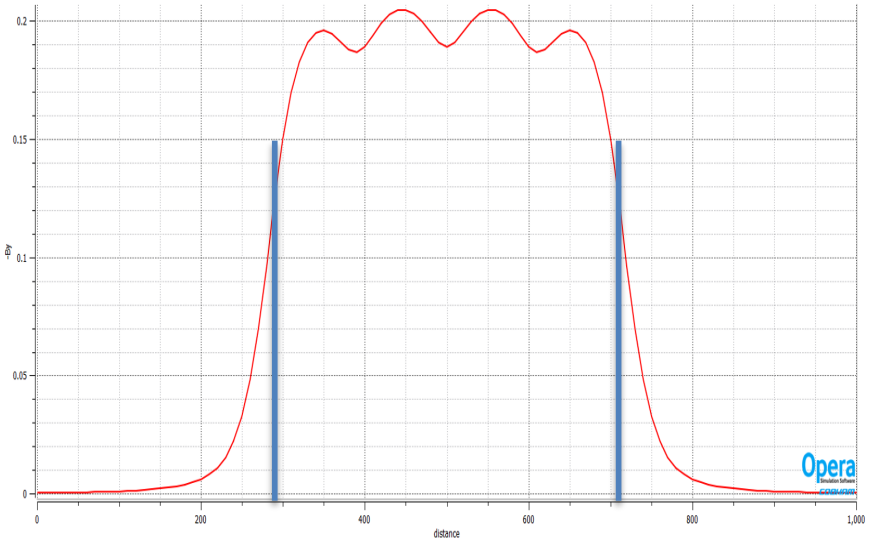

PAN Instrument proposal (LOP-G or satellite)

- **Light weight (20 kg) low power (20 W) spectrometer with permanent magnet**

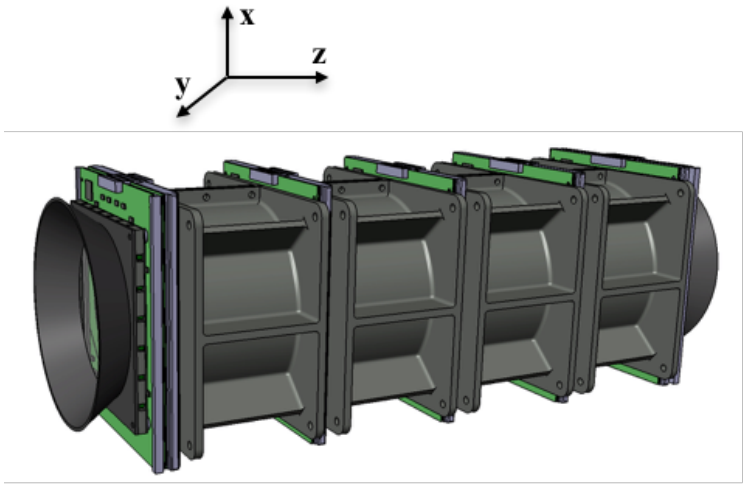

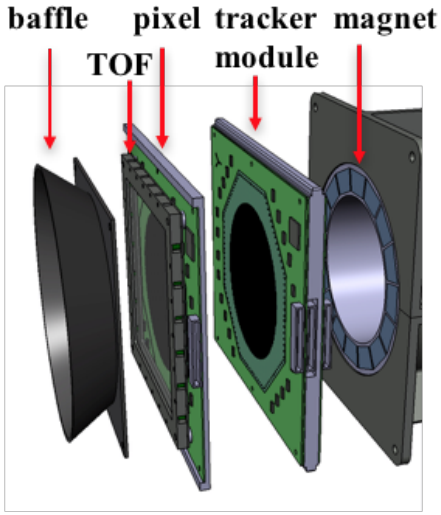

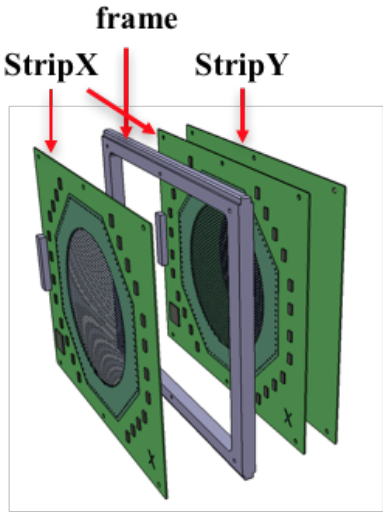

- **4 Halbach permanent magnet sectors, ϕ = 10 cm, L = 10 cm each, provide a dipole magnetic field of ~0.2 Tesla, total weight ~11 kg**

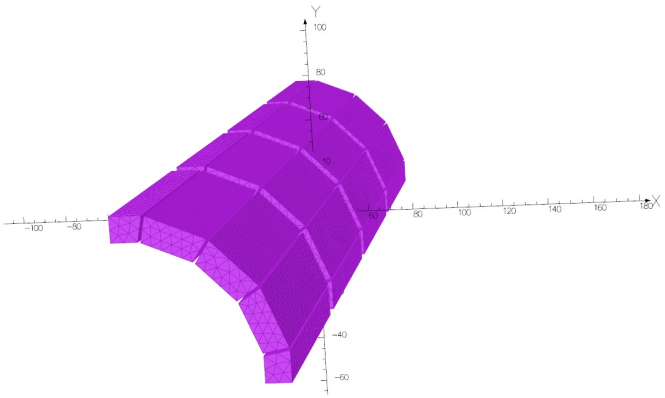

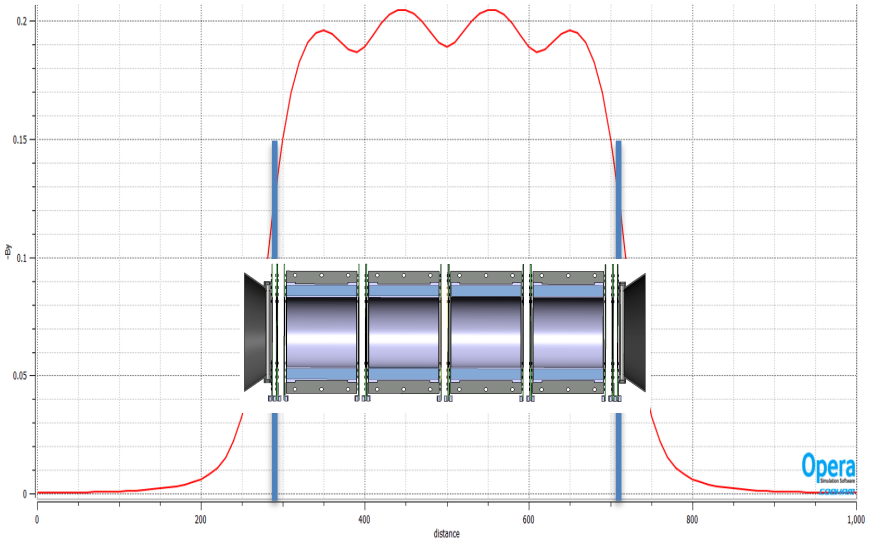

PAN detector modules

- **5 tracker modules, 2 TOF modules, 2 pixel modules**

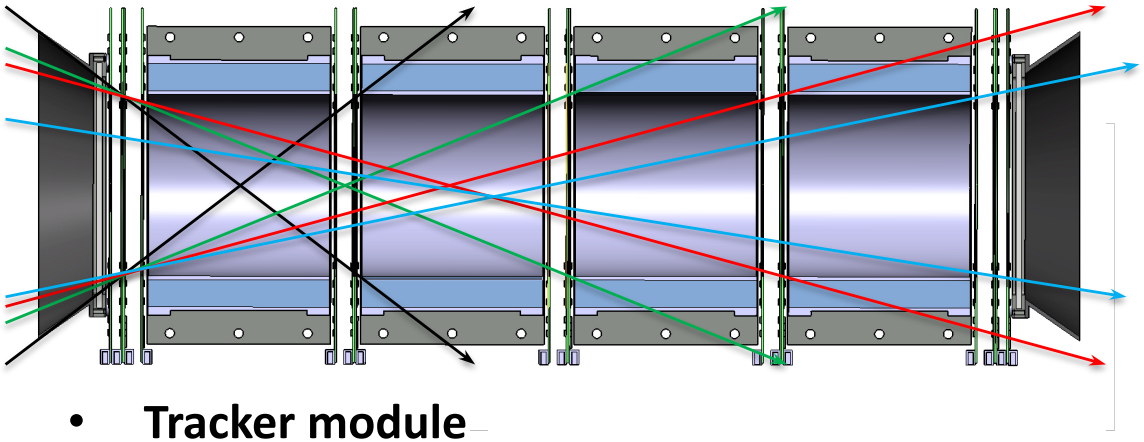

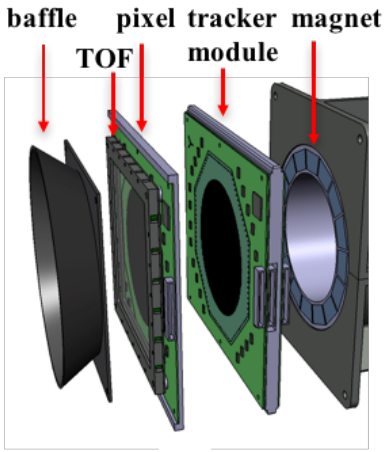

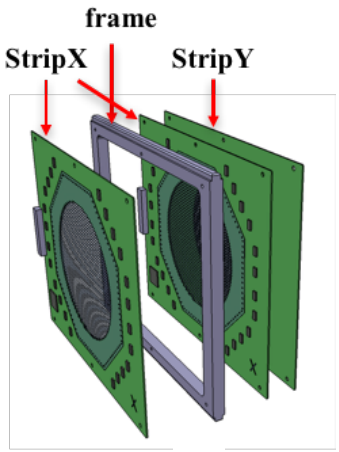

- **Tracker module**
  - 2 StripX: 25 µm readout pitch, 150 µm thick, **2 µm resolution**, to measure both bending radius and bending angle, 40k channels, total power budget 8W
  - 1 stripY: 500 µm readout pitch, 150 µm thick, high dynamic range ASIC for Z = 1 – 26, trigger signal, time stamp (<100 ps resolution), 1k channels, total ~1 W
- **TOF module**
  - 3 mm thick scintillator, read out on all sides by SiPM: trigger, particle counter (max. ~10 MHz), charge measurement (Z = 1 -26), time (<100 ps), total ~1 W
- **Pixel module**
  - Avoid measurement degradation for high rate solar events
  - Issue to be resolved: total (static) power consumption ~2-4 W, for ~190 cm^2

PAN measurement principle

- **Measure momentum by both radius and bending angle, to have large acceptance**
  - **GF: ~32, 10, 5, 3 cm^{2}sr (x2 for isotropic sources), for crossing 1, 2, 3, 4 sectors**
  - **Open angle 25, 33, 47, 80°**

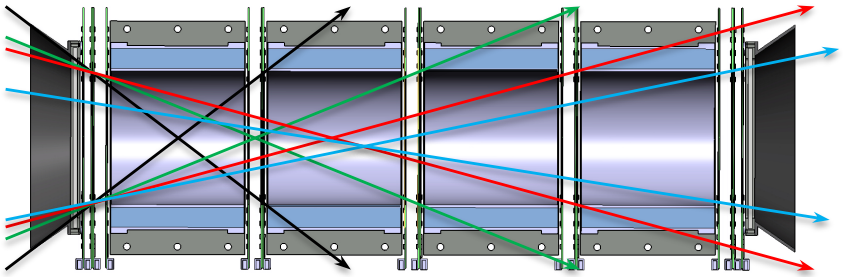

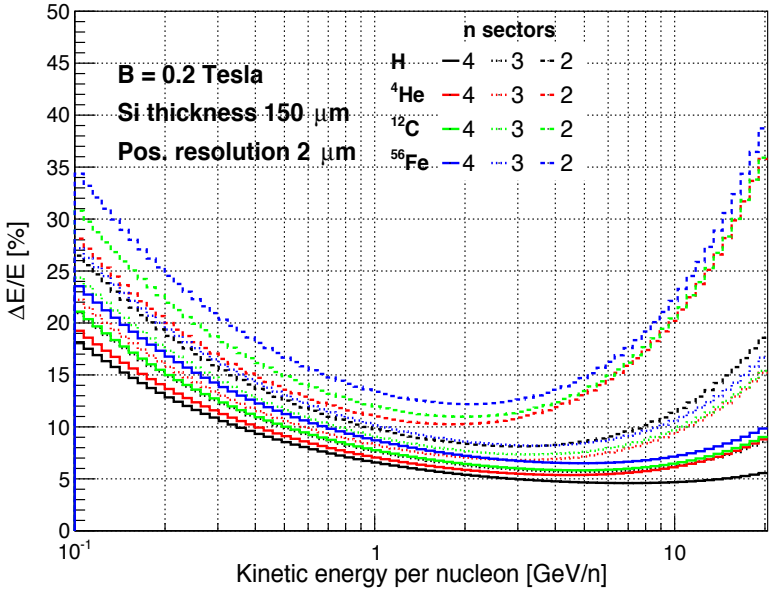

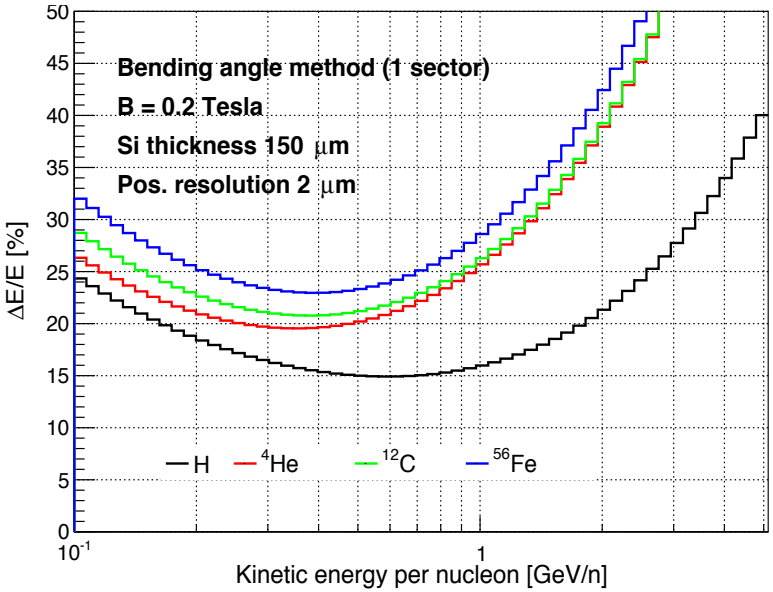

- **Energy resolution <10% for protons of 0.4 – 20 GeV for 4-sector acceptance**
  - **<20% for protons of 0.2 – 2 GeV for 1-sector acceptance**

Role of the pixel detector

The key of the PAN design is to optimize resource utilization for both long term low rate (GCR) and short term high rate (SEP) operation

- **At high rate (S5 SEP events)**
  - **Improve measurement of triggered events: TOF pileup and Si layer multi-hits**
    - **Pixel, no pileup: provide unambiguous charge and 3d points**
  - **Non-triggered pixel hits, ~2.4 MHz**
    - **Pixel is working "standalone", so energy information limited, but at least can provide an integrate flux measurement for >20 MeV**
  - **Requirement: up to 5-10 MHz (~95 cm^2) → ~1.5-3 Hz/pixel**
- **At lower rate (up to S4 SEP events)**
  - **1 extra 3d point**
    - **With 4-10 µm position resolution, improve energy resolution**
    - **With ~100 µm position resolution, help pattern recognition**
  - **1 extra charge measurement**
    - **At least for lower Z, effective limit to be investigated**

Mini.PAN for planetary missions

- **Smaller device for in-situ radiation measurement and monitoring**
  - **2 Halbach permanent magnet sectors, each ϕ = 5 cm, L = 5 cm, provide a dipole magnetic field of ~0.4 Tesla, magnet weight ~2 kg, total < 5 kg**
  - **GF: ~6.3 or 2.1 cm^{2}sr (x2 for isotropic sources, for crossing 1 or 2 sectors**

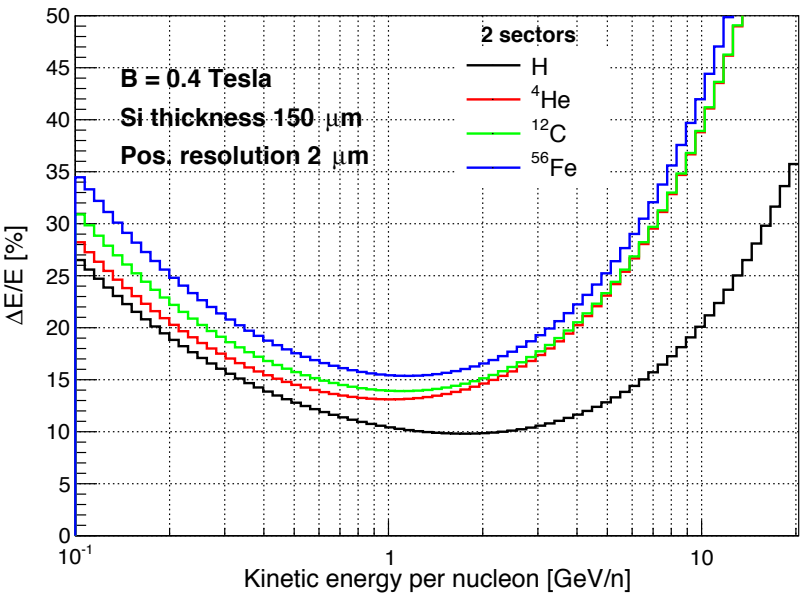

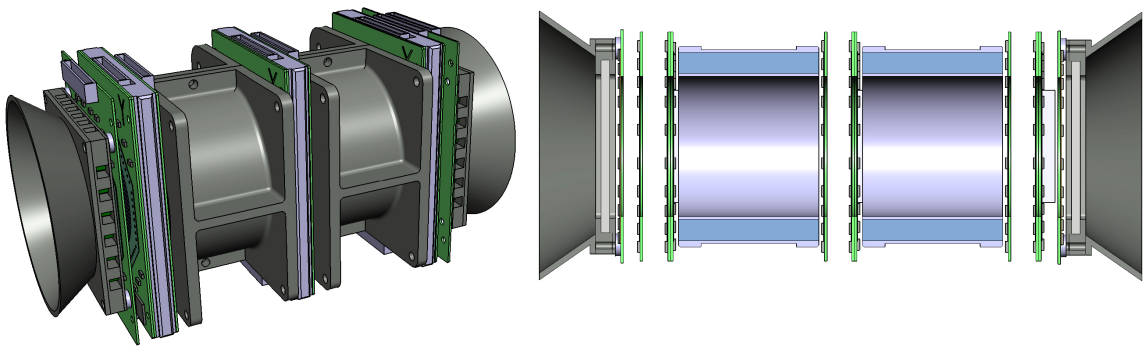

Can be simplified further with only one-side sensitive

Energy resolution <20% for p of 0.2 – 10 GeV for 2-sector acceptance

Shorter sector length compensated by stronger B field

Can add a few layers of Si detectors to measure 10 MeV – 20 MeV with the classical ΔE –E method (~2.4 mm of Si) ⇒ full range energetic particle monitor

Conclusion

- **Magnetic spectrometer is the most suitable measurement technique in the range 100 MeV/n – 20 GeV/n and we have a detector design**
  - **Principle and technologies demonstrated by AMS-01, PAMELA and AMS-02**
  - **High precision strip detector are available, high rate low power active pixel sensors are becoming available**
- **Direct measurements of penetrating particles (100 MeV/n – 20 GeV/n) in deep space are important**
  - **Fill a gap in cosmic ray observation**
  - **Possibly open a new window for solar physics**
  - **Unique input to space weather modeling and forecasting**
  - **Indispensable for human deep space missions**
  - **Important for planetary exploration**
- **PAN is suitable for LOP-G or medium to large solar missions, while mini.PAN is suitable for planetary exploration missions**

Conclusion

- **Magnetic spectrometer is the most suitable measurement technique in the range 100 MeV/n – 20 GeV/n and we have a detector design**
  - **Principle and technologies demonstrated by AMS-01, PAMELA and AMS-02**
  - **High precision strip detector are available, high rate low power active pixel sensors are becoming available**
- **Direct measurements of penetrating particles (100 MeV/n – 20 GeV/n) in deep space are important**
  - **Fill a gap in cosmic ray observation**
  - **Possibly open a new window for solar physics**
  - **Unique input to space weather modeling and forecasting**
  - **Indispensable for human deep space missions**
  - **Important for planetary exploration**
- **PAN is suitable for LOP-G or medium to large solar missions, while mini.PAN is suitable for planetary exploration missions**

mini.PAN has been founded by H2020 FET_OPEN for the design and construction of a ground demonstrator: in 3 year we will have a ready-to-fly detector!